NDD-7803-AL Dual dome 2x5MP 3.2-8.1mm IP67 IR

FLEXIDOME dual 7100i IR



- Two 5MP imagers at 30 fps in one camera on a single IP address
- Orientation-based split IR, based on the camera installation with dedicated LEDs that are powered on for best experience
- IVA Pro brings highly reliable deep-learning based detection of persons and vehicles to scenes ranging from sterile to crowded and congested zones
- HDR X - High Dynamic Range to see every detail in both bright and dark areas of the scene without HDR motion blur and artefacts
- Built-in microphone and alarm/audio I/O enable sound-triggered alerts and two-way communication for smarter response

The FLEXIDOME dual 7100i IR camera is a compact dual-directional camera designed for versatile deployment in environments such as corridors, stairwells, and corners. It features two independently operating zoom lenses, allowing flexible configurations including dual-directional views, a 180° overview, or a combination of telephoto and wide-angle views in a single direction. This adaptability enhances situational awareness while reducing the number of cameras needed and lowering overall deployment costs.
Powered by the CPP16 platform, the camera is capable to run up to two different IVA Pro versions on the camera, or combine an IVA Pro version with Intelligent Audio Analytics, adding a second layer of detection.
The advanced imaging technologies of the camera, including Starlight and HDR X, deliver clear, detailed images in low-light and challenging lighting conditions. As ambient light fades, the orientation-based split IR automatically activates dedicated LEDs based on wall or ceiling mounting, ensuring optimal infrared illumination and maintaining image clarity even in complete darkness.

Designed for reliability, the camera features IK10 vandal resistance and IP66/67 weather protection. Combined with FIPS 140-3 Level 3 enabled by an EAL6+ certified Secure Element, it delivers peace of mind through robust durability and top-tier data security.

Functions

HDR X - High Dynamic Range
HDR X technology combines unique sensor functionality and advanced algorithms. It captures high quality video of moving objects in scenes with a large dynamic range. It also allows HDR imaging at lower light levels in which traditional HDR technologies are non-functional.
This is possible because the HDR X - Motion optimized mode takes two different readouts from one exposure to capture details in both the highlights and shadows of the scene, instead of blending multiple exposures like standard HDR technologies. Blending multiple exposures reduces sharpness and creates unwanted imaging artefacts on moving objects. HDR X resolves these issues, providing a crisp image with improved dynamic range.

Orientation-based split IR
The camera is equipped with four distinct IR zones, each containing dedicated LEDs, optimized specifically for wall or ceiling installation. Based on how the camera is mounted, the corresponding LEDs in each zone are activated automatically. This design avoids the compromises of relying on a single LED arrangement for all positions, providing powerful, precisely directed infrared illumination that delivers clearer night-time images and consistently high image quality.

Intelligent Video Analytics (IVA) Pro
The camera comes with IVA Pro Buildings, IVA Pro Perimeter, and IVA Pro Privacy pre-installed. Other options can be licensed to optimize the camera analytics for enhanced surveillance capabilities tailored to the application.
The advanced analytics brings highly reliable deep-learning-based detection and tracking of persons and vehicles to scenes ranging from sterile zones to crowded and congested areas. Resilient against false triggers caused by challenging environmental conditions such as rain, wind-induced movements (such as trees), snow, hail, water reflections, shadows, and insects, the camera ensures accurate and reliable object detection, tracking, and classification. A smart set of alarm and counter rules ensures that you are promptly alerted when predefined alarms are triggered.
Configuration effort is made easy with the camera already classifying objects out of the box. With these advanced features, the camera provides comprehensive security coverage across a wide range of environments and scenarios.

Intelligent Video Analytics (IVA) Pro - optional licenses
With the introduction of IVA Pro Appearance users can conduct forensic searches based on distinct characteristics, such as color of clothing, bags, hats, or other features, enabling a more precise search of individuals. Furthermore, the integration of IVA Pro Visual Gun Detection enhances security measures by automatically detecting and classifying people brandishing firearms, ensuring comprehensive threat detection. Additionally, the camera now features IVA Pro Personal Protective Equipment (PPE), designed to detect the proper use of personal protective equipment, which can reduce accident risk and promote health and safety in various environments.
IVA Pro Traffic can be licensed to optimize the camera analytics for ITS applications such as counting and classification, as well as Automatic Incident Detection, which are necessary for highway and urban infrastructure planning.

Two-way audio and built-in microphone
Two-way audio allows the operator to communicate with visitors or intruders via an external audio line input and output. Alternatively, there is an integrated microphone to capture crisp and clear audio. By using the integrated or external microphone, audio detection can be used to generate alarms to alert the security operator quicker and act more proactively. If required by local laws, the microphone can be disabled.

Auto-calibration
The camera offers auto-calibration by transforming 2D pixels into 3D real world measures, such as size, speed and geolocation of objects for tracking use cases. AI technology allows the camera to detect and analyze persons and vehicles in the scene to determine calibration parameters. Calibration efforts are now reduced to a single click, followed by the usual human verification. This reduces the calibration effort or time investment, ensuring optimal accuracy while keeping costs to a minimum.

Intelligent streaming
Smart encoding capabilities, utilizing video analytics, reduce bandwidth consumption to extremely low levels. Only relevant information in the scene, such as motion or objects found through analytics, needs to be encoded. The camera is capable of quad streaming, allowing it to deliver independent and configurable streams for live viewing, recording, or remote monitoring via constrained bandwidths. Each of these streams can be adapted independently to deliver high-quality video, perfectly tailored to purpose, while reducing bit rate by up to 90% compared to a standard camera.

DORI coverage
DORI (Detect, Observe, Recognize, Identify) is a standard system (EN-62676-4) for defining the ability of a person viewing the video to distinguish persons or objects within a covered area. The maximum distance at which a camera/lens combination can meet these criteria is shown below:
5 MP camera with 3.2 mm - 8.1 mm lens

DORI	DORI definition	Distance	Horizontal width
Detection	25 pixels/m (8 pixels/ft)	41 m / 156 m (134 ft / 513 ft)	104 m (340 ft)
Observation	63 pixels/m (19 pixels/ft)	16 m / 62 m (53 ft / 203 ft)	41 m (135 ft)
Recognition	125 pixels/m (38 pixels/ft)	8 m / 31 m (27 ft / 103 ft)	21 m (68 ft)
Identification	250 pixels/m (76 pixels/ft)	4 m / 16 m (13 ft / 51 ft)	10 m (34 ft)

Data security

Security begins at production, where each device receives its unique cryptographic identity. From first boot, every layer protects data and ensures secure interactions through Secure Element 3.0 that provides enterprise-grade cybersecurity, strengthening system integrity from the inside out. Secure integration protocols protect connections with third-party systems, cloud platforms, and network infrastructure, while independent third-party certifications validate the Secure Product Lifecycle and supply chain practices. Systems remain protected, reliable, and aligned with modern regulatory standards.

Edge recording

Insert a memory card into the card slot to store up to 2 TB of local alarm recording. Pre-alarm recording in RAM reduces recording bandwidth on the network, and extends the effective life of the memory card.
It has advanced edge recording providing a reliable storage solution possible due to the combination of these functions:

- Industrial SD card support allows for extreme lifetime
- Health monitoring of industrial SD cards provide early service indications.

Cloud-based services

Using the Bosch Security Cloud, you can configure, troubleshoot, and update supported devices using the browser-based interface or standard tools.
With one click on Remote Portal, you can activate additional value-added services, such as Alarm Management in Cloud VMS, or VideoView+.
VideoView+ provides an easy-to-use and cost-effective solution to remotely connect to your device from anywhere, at any time. Leverage the power of the Bosch cloud to monitor your premises and get notified about any incident. VideoView+ also enables live streaming, locally and from remote, of up to 8 concurrent devices via Video Security Client, or of up to 4 concurrent devices on the Android and iOS app clients.
This includes replay and export functionality, as well as forensic search to define and perform search criteria for recorded events and support for Genetec Security Center SaaS, enabling direct-to-cloud video streaming.

Bosch Remote Portal

With the secure cloud infrastructure, Remote Portal, you can manage your connected Bosch devices. From the Remote Portal you can:

- Complete initial configuration of your connected Bosch devices (online or offline).
- Update firmware for single or multiple devices.
- Manage certificates.
- Monitor the health of your connected Bosch devices.

System integration and ONVIF conformance

The camera conforms to ONVIF Profiles S, G, M, and T, ensuring interoperability with network video products across manufacturers and integration with third-party ONVIF compliant systems. For detailed ONVIF specifications, refer to onvif.org.

Modular camera mounts and accessories

A full line of modular camera mounts and accessories are available that allow a consistent design across different platforms and a wide range of installation possibilities. Several dedicated accessories are available that seamlessly fit to the camera and expand the different installation options.
Available options include: a pipemount, an on-camera weather protector, a clear or tinted bubble, paintable cover, a surveillance cabinet with power and fiber optic options and different mounting options.

Regulatory information

Type	Standard
Emission	EN 55032 (class B), EN 50121-4, FCC 47 CFR Part 15 Subpart B, ICES-003 Issue 7, VCCI-CISPR 32
Immunity	EN 55035, EN 50121-4, EN 50130-4; IEC 61000-4-2, IEC 61000-4-3, IEC 61000-4-4, IEC 61000-4-5, IEC 61000-4-6, IEC 61000-4-8, IEC 61000-4-11
Environmental	EN50130-5, Class IV, Fixed equipment, Outdoor in general, NEMA 2.1.5.1 STD2 (cover temperature test only), NEMA TS2, EN IEC 63000, IEC 60068-2-1, IEC 60068-2-2, IEC 60068-2-6, IEC 60068-2-18, IEC 60068-2-27, IEC 60068-2-30, IEC 60068-2-42, IEC 60068-2-52, IEC 60068-2-75, IEC 60068-2-78, EN 60529
Safety	IEC 62471 (Eye safety for IR), EN IEC/IEC/UL 62368-1
Image performance	IEC 62676-5
HD	SMPTE 274M-2008 (Resolution: 1920x1080)
Color representation	ITU-R BT.709-6
ONVIF conformance	EN 50132-5-2, EN 62676-2
Impact protection	IEC/EN62262 (IK10)
Water/dust protection	IEC60068-2-18:2000 (Similar to EN60529 IPX7), NEMA 4X
Environment	RoHS EU, 2011/65/EU and 2015/863/EU, WEEE EU, 2012/19/EU
Marks	
Compliance	Europe and Asia Pacific model: NDAA compliant

Type	Standard
	North America and Latin America model: NDAA and TAA compliant

Region	Regulatory compliance/quality marks	
USA	UL 2900-2-3 CAP	4791462681-003 Cybersecurity Assurance Program
Global	IEC 62443-4-1	Industrial Cyber Security Capability
Europe	CE	
Global	IEC 62443	DK-174558-UL

Installation/configuration notes

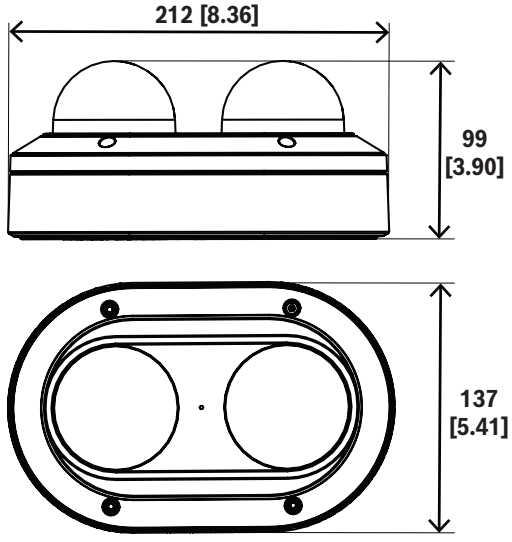

Dimensions in mm (inch)

Parts included

Quantity	Component
1	FLEXIDOME dual 7100i IR camera
1	TR-20 security Torx Allen key
1	2-pin terminal block
1	6-pin terminal block
3	Grommets (2 attached to the camera, 1 in accessory bag)
1	Mount plate
1	RJ45 guider
1	Quick installation guide
1	Safety and security information
3	MAC address labels

Technical specifications

Sensor

Total sensor pixels	5 MP approx.
Sensor type	1/2.8 inch CMOS; 2.0 µm
Effective pixels (H x V)	2592 x 1944 (4:3)

Sensitivity

Low light technology	starlight
Color (lx) (sensitivity measured according to IEC 62676 Part 5)	0.035 lx
Monochrome (lx) (sensitivity measured according to IEC 62676 Part 5)	0.003 lx
High Dynamic Range (HDR) (dB)	120 dB HDR

Optical

Lens focal length (mm)	3.2 mm – 8.1 mm
Iris control	Fixed-iris
Horizontal field of view (°)	104° – 37°
Vertical field of view (°)	73° – 28°
Lens aperture (/F)	F1.9 - F3.2
Zoom/focus control	Motorized

Night vision

IR function	On; Off; Auto
IR intensity	Manually adjustable; Automatic; 4 controllable zones
Built-in IR (m)	30 m
Built-in IR (ft)	98 ft
Wavelength (nm)	850 nm

Platform

Common Product Platform	CPP16
Memory (MB)	4096 MB RAM; 8192 MB flash

Video streaming

Video compression	H.264 (ISO/IEC 14496-10); M-JPEG; H.265/HEVC
Sensor mode	30 fps, HDR X, 2592 × 1944 (5MP) 25 fps, HDR X, 2592 × 1944 (5MP)

Streaming	Multiple configurable streams in H.265; H.264 and M-JPEG; Configurable framerate and bandwidth; Bosch Intelligent Streaming
Frame rate (fps)	1 fps – 30 fps
Camera processing latency	<120ms
GOP structure	IP; IBP; IBBP
Video signal-to-noise ratio (dB)	>55 dB
Resolution	5MP (4:3), 2592 x 1944 to 0.3MP (4:3), QVGA (4:3) 320 x 240 3.8MP (16:9), 2592 x 1456 to 0.1MP (16:9), 320 x 184

Video functions

ALC	Mode (Standard, Fluorescent), Priority - dark vs. bright, Speed, Level, Maximum gain [dB]
Shutter modes	Automatic Electronic Shutter (AES); 1/15,000 max; Default shutter; Fixed shutter
Day/night modes	Auto (adjustable switch points); Color; Monochrome
WDR technology	HDR X
Field of view adjustment	Pan, tilt, roll; Autofocus
Camera functionality	Mirror image; Rotation 90°; Rotation 180°; Rotation 270° including upright mode; Backlight compensation (BLC); Intelligent dynamic noise reduction; Contrast enhancement; Sharpness enhancement; Intelligent defog; Pixel counter; Tamper detection; Saturation; Brightness
Camera LED	Auto disable; Enable; Disable
White balance (K)	2,000 K – 10,000 K
White balance modes	Standard auto; Hold mode; Sodium lamp auto; Basic auto; Manual RGB
Number of privacy masks	8 independent areas, fully programmable
Display stamping	Name; Logo; Date/time; Alarm message
Scene modes	Standard; Sodium lighting; Vibrant; Sports & gaming; Retail; License plate recognition; Fast movement; Sensitivity boost; Color only; Backlight
Positioning	Mounting height; Coordinates

Video content analysis

Analysis type (pre-installed)	IVA Pro Buildings; IVA Pro Perimeter; Camera trainer
Alarm triggers	Any object; Object in field; Line crossing; Enter / leave field; Loitering; Follow route; Idle / removed object; Counting; Occupancy; Condition change; Similarity search; Objects stopping or starting to move
Object filters	Duration; Size; Aspect ratio; Speed; Direction; Color; Object classes (6)
Tracking modes	Standard (2D) tracking; 3D tracking; 3D people tracking; Ship tracking; Museum mode
Calibration	3D auto calibration
Number of possible alarm rules (simultaneously)	16 per imager
Additional functionalities	Tamper detection; Loud noises detection
Supported analytics (licensed)	IVA Pro Traffic; IVA Pro Appearance; IVA Pro PPE; IVA Pro Visual Gun Detection In a future release: IVA Pro License Plate; IVA Pro Vehicle Make Model; IVA Pro Dangerous Good Signs; IVA Pro License Plate + Make Model; Intelligent Audio Analytics: Gunshot detection

Storage

Internal storage	5-s-pre-alarm-recording
Memory card slot	Micro SDHC; Micro SDXC; Micro SD up to 2 TB
Industrial SD cards	Extreme lifetime and health monitoring support that provides early service indication
Recording mode	Continuous (ring); Scheduled; Alarm; Event

Inputs and outputs

Ethernet	RJ45
Number of USB ports	1 (USB 2.0 Type C, for use with wireless USB dongle for setup and commissioning, sold separately)
Built-in microphone	Digital MEMS microphone
Audio line in	0.6 Vrms max, 40 kOhm typical
Audio line out	1.0 Vrms at 10 kOhm typical

Alarm inputs	1
Alarm outputs	1
Surge protection	1KV L-L and 2KV L-G

Audio

Compression and sampling rate	G.711 8 kHz; L16 16 kHz; AAC-LC 80kbps 16 kHz; AAC-LC 48kbps 16 kHz
Minimum signal-to-noise ratio (dB)	50 dB
Audio streaming	Full duplex; Half duplex

Network

Protocols / standards	IPv4; IPv6; UDP; TCP; RTP/RTCP; IGMP V2/V3; ICMP; ICMPv6; RTSP; FTP; ARP; DHCP; APIPA (Auto-IP, link local address); NTP (SNTP); SNMP (V1, MIBII); SNMP (V3, MIBII); DNS; DNSv6; SMTP; iSCSI; DiffServ (QoS); LLDP; SOAP; RTSPS; MQTT; SRTP; HTTP/HTTPS; HSTST; DDNS (DynDNS.org); MQTTS; Syslog
Ethernet type	10/100/1000BASE-T; Auto-sensing; Full / half duplex
Conformity	ONVIF Profile S; ONVIF Profile G; ONVIF Profile T; ONVIF Profile M

Data security

Cryptographic coprocessor (SE)	RSA 4096 bit; 512-bit ECC elliptic curves; AES/CBC 256 bit
Public Key Infrastructure (PKI)	X.509 certificates; SCEP; Device identity certificate (Root CA); Embedded firewall
Encryption	TLS 1.2; AES 256; AES 128; TLS 1.3
Network authentication	802.1x; EAP/TLS; CHAP; Digest authentication; Configurable session timeout
Local storage encryption	AES-XTS
Signed video framework	MD5; SHA-1; SHA-256; Checksum
Firmware protection	Signed Firmware; Secure boot; Software sealing; SBOM (Software Bill of Materials); Cloud firmware check
Certified security standards	Common Criteria EAL6+ (Secure Element 3.0); FIPS 140-3 Level 3 (Secure Element 3.0)

Electrical

PoE input	PoE+ IEEE 802.3at Type 2, Class 4 PoE+ and auxiliary power can be connected simultaneously for redundant operation
Input voltage (VAC)	24 VAC ±10%
Input voltage (VDC)	12 VDC ±10%
Power consumption PoE (W) (typical – maximum)	11.25 W – 24.75 W
Power consumption VAC (VA) (typical – maximum)	24 VA
Power consumption VAC (W) (typical – maximum)	11.05 W – 24.25 W
Power consumption VDC (W) (typical – maximum)	11.25 W – 24.55 W

Mechanical

Material	Housing: Aluminum with dehumidifying membrane and waterproof connection area
Bubble material	Clear polycarbonate
Pan range (°)	0° - 355°
Tilt range (°)	-10° - 100°
Roll range (°)	352°
Dimensions (H x W x D) (mm)	99 mm x 212 mm x 137 mm
Dimensions (H x W x D) (in)	3.90 in x 8.36 in x 5.41 in
Weight (kg)	1.66 kg
Weight (lb)	3.66 lb
Color (RAL)	RAL 9003 Signal white
Mounting type	Surface-mounted ; Mounting plate included for surface mount, 4 inch square junction box, single and double gang box, 1/4-inch 20 UNC screw thread
Conduit	1/2 -inch NPT (M20) conduit side entry

Environmental

Operating temperature (°C)	-40 °C – 60 °C with ambient convection
Operating temperature (°F)	-40 °F – 140 °F with ambient convection
Storage temperature (°C)	-40 °C – 70 °C

Storage temperature (°F)	-40 °F – 158 °F
Cold start temperature (°C)	-20 °C
Cold start temperature (°F)	-4 °F
Operating relative humidity, non-condensing (%)	5% – 93%
Operating relative humidity, condensing (%)	5% – 100%
Storage relative humidity (%)	0% – 98%
Impact protection	IK10
IP rating	IP66; IP67
Degree of protection	NEMA type 4X
Country of origin	Europe and Asia Pacific model: Thailand North America and Latin America model: Taiwan

Ordering information

NDD-7803-AL Dual dome 2x5MP 3.2-8.1mm IP67 IR
Fixed dual dome camera, IVA Pro Buildings, IVA Pro Perimeter, IVA Pro Privacy, IP67 IR, 2x5MP, 3.2-8.1mm lens
Order number **NDD-7803-AL**

Accessories

NDA-7042-WP Weather protector, dual
On-camera weather protector for FLEXIDOME dual 7100i IR cameras
Order number **NDA-7042-WP**

NDA-7042-PIP Pendant interface plate, dual
Pendant interface plate for FLEXIDOME dual 7100i IR cameras
Order number **NDA-7042-PIP**

NDA-7042-PIPW Pendant interface plate, weather, dual
Pendant interface plate with weather protector for FLEXIDOME dual 7100i IR cameras
Order number **NDA-7042-PIPW**

NDA-7042-PC Paintable cover, dual, 4 pcs
Paintable cover for FLEXIDOME dual 7100i IR cameras
Order number **NDA-7042-PC**

NDA-7042-CBL Clear bubble, dual
Clear bubble for FLEXIDOME dual 7100i IR cameras
Order number **NDA-7042-CBL**

NDA-7042-TBL Tinted bubble, dual
Tinted bubble for FLEXIDOME dual 7100i IR cameras
Order number **NDA-7042-TBL**

NDA-U-CMT Corner mount adapter
Universal corner mount, white
Order number **NDA-U-CMT**

NDA-U-PMAS Pole mount adapter small
Pole mount adapter small
Universal pole mount adapter, white; small.
Order number **NDA-U-PMAS**

NDA-U-PMAL Pole mount adapter large
Universal pole mount adapter, white; large
Order number **NDA-U-PMAL**

NDA-U-PSMB Pendant wall/ceiling mount SMB
Surface mount box (SMB) for wall mount or pipe mount.
Order number **NDA-U-PSMB**

NDA-U-WMT Pendant wall mount
Universal wall mount for dome cameras, white
Order number **NDA-U-WMT**

NDA-U-WMTG Pendant wall mount, gang box
Universal wall mount, compatible with gang box installation for fixed dome cameras only, white
Order number **NDA-U-WMTG**

NDA-U-PMT Pendant pipe mount, 12" (31cm)
Universal pipe mount for dome cameras, 31 cm, white
Order number **NDA-U-PMT**

NDA-U-PMTS Pendant pipe mount, 4" (11 cm)
Universal pendant pipe mount for dome cameras, 11 cm (4"), white
Order number **NDA-U-PMTS**

NDA-U-PMTE Pendant pipe extension, 20" (50cm)
Extension for universal pipe mount, 50 cm, white
Order number **NDA-U-PMTE**

NDA-U-PMTG Pendant pipe mount, gang box
Universal pipe mount, compatible with gang box installation for fixed dome cameras only, white
Order number **NDA-U-PMTG**

NDA-U-RMT Pendant parapet mount
Universal roof mount for dome cameras, white, for outdoor usage
Order number **NDA-U-RMT**

NDA-U-PA0 Surveillance cabinet 24VAC
Surveillance cabinet, 24 VAC input, 24 VAC output
Order number **NDA-U-PA0**

NDA-U-PA1 Surveillance cabinet 120VAC
Surveillance cabinet, 100 - 120 VAC 50/60 Hz input, 24 VAC output
Order number **NDA-U-PA1**

NDA-U-PA2 Surveillance cabinet 230VAC
Surveillance cabinet, 230 VAC input, 24 VAC output
Order number **NDA-U-PA2**

NCA-WLAN-EU Wireless installation dongle EU
Wireless installation dongle for wireless commissioning
Order number **NCA-WLAN-EU**

NCA-WLAN-NA Wireless installation dongle NA
Wireless installation dongle for wireless commissioning for North America
Order number **NCA-WLAN-NA**

LTC 9230/01 Parapet roof mount adapter
Flat roof mount adapter for mounting NDA-U-RMT on a flat surface.
Order number **LTC 9230/01**

VG4-SFPSCKT Ethernet to SFP interface kit
Ethernet media converter video transmitter/data receiver fiber optic kit
Order number **VG4-SFPSCKT**

SFP-2 Fiber module, multimode, 1310nm, 2LC
SFP Fiber Optic Module, 2 km (1.2 miles), 2 LC connectors.
Multi-mode
1310 mm
Order number **SFP-2**

SFP-3 Fiber module, single-mode, 1310nm, 2LC
SFP Fiber Optic Module, 20 km (12.4 miles), 2 LC connectors.
Single-mode
1310 nm
Order number **SFP-3**

SFP-25 Fiber module, 1310/1550nm, 1SC
SFP Fiber Optic Module, 2 km (1.2 miles), 1 SC connector
Multi-mode
1310/1550 nm
Order number **SFP-25**

SFP-26 Fiber module, 1550/1310nm, 1SC
SFP Fiber Optic Module, 2 km (1.2 miles), 1 SC connector
Multi-mode
1550/1310 nm
Order number **SFP-26**

MNT-ICP-FDC Drop ceiling suppport kit for FLEXIDOME
Suspension ceiling support kit for FLEXIDOME IP 2000/4000/5000/5100i/7000 (except RD series) and panoramic 5000/7000 series cameras
Order number **MNT-ICP-FDC**

NPD-6001C Midspan, bt, 60W, indoor
Indoor midspan with Power-over-Ethernet for use with PoE-enabled cameras; 60 W, single-port, AC input
Order number **NPD-6001C**

NPD-6001C-E Midspan, bt, 60W, IP67
Outdoor midspan with Power-over-Ethernet for use with PoE-enabled cameras; 60 W, single-port
Order number **NPD-6001C-E**

NPD-6001-I Midspan, bt, 60W, indoor, industrial
industrial midspan with Power-over-Ethernet for use with PoE-enabled cameras; 60 W, single-port
Order number **NPD-6001-I**

Software Options

MVC-IVA-TRA IVA Pro Traffic
Video analytics software based on deep neural network technology for traffic monitoring and Automatic Incident Detection.
Order number **MVC-IVA-TRA**

MVC-IVA-PPE IVA Pro PPE
Video analytics software based on deep neural network technology for detecting personal protective equipment.
Order number **MVC-IVA-PPE**

MVC-IVA-APC IVA Pro Appearance
Video analytics software based on deep neural network technology for detailed person appearance attributes allowing advanced forensic search.
Order number **MVC-IVA-APC**

MVC-IVA-VGD IVA Pro Visual Gun Detection
Video analytics software based on deep neural network technology, designed to detect upright persons and brandished guns.
Order number **MVC-IVA-VGD**

https://www.boschsecurity.com

© Bosch Security Systems 2026